SONY

3-810-941-21 (1)

FM/AM PLL Synthesized Clock Radio

Operating Instructions

DREAM MACHINE

Dream Machine is a trademark of Sony Corporation.

ICF-C233

Sony Corporation © 1996 Printed in Malaysia

WARNING

To prevent fire or shock hazard, do not expose the unit to rain or moisture.

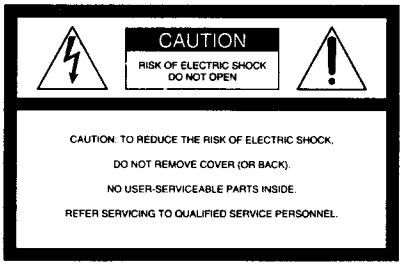

Before You Begin

Thank you for choosing the Sony Dream Machine. This clock radio will give you many hours of reliable service and listening pleasure. Before operating the Dream Machine, please read these instructions thoroughly and retain them for future reference.

Features

- Dual alarm FM/AM PLL (phase locked loop) synthesized clock radio
- 5 random memory presets
- Radio and buzzer alarms with the snooze function
- LCD display with backlight

This symbol is intended to alert the user to the presence of uninsulated "dangerous voltage" within the product's enclosure that may be of sufficient magnitude to constitute a risk of electric shock to persons.

This symbol is intended to alert the user to the presence of important operating and maintenance (servicing) instructions in the literature accompanying the appliance.

* The graphical symbols are on the bottom enclosure.

You are cautioned that any changes or modifications not expressly approved in this manual could void your authority to operate this equipment.

INFORMATION

This equipment has been tested and found to comply with the limits for a Class B digital device, pursuant to Part 15 of the FCC Rules. These limits are designed to provide reasonable protection against harmful interference in a residential installation. This equipment generates, uses, and can radiate radio frequency energy and, if not installed and used in accordance with the instructions, may cause harmful interference to radio communications. However, there is no guarantee that interference will not occur in a particular installation. If this equipment does cause harmful interference to radio or television reception, which can be determined by turning the equipment off and on, the user is encouraged to try to correct the interference by one or more of the following measures:

—Reorient or relocate the receiving antenna.
—Increase the separation between the equipment and receiver.
—Connect the equipment into an outlet on a circuit different from that to which the receiver is connected.
—Consult the dealer or an experienced radio/TV technician for help.

Precautions

- Operate the unit only on 120 V AC, 60 Hz.
- The nameplate indicating voltage, etc. is located on the bottom exterior.
- Disconnect the cord by grasping the plug. Never pull it by the cord.
- Do not leave the unit in a location near a heat source such as a radiator or airduct, or in a place subject to direct sunlight, excessive dust, mechanical vibration, or shock.
- Allow adequate air circulation to prevent internal heat build-up. Do not place the unit on a surface (a rug, a blanket, etc.) or near materials (a curtain) which might block the ventilation holes.
- Should any liquid or solid object fall into the unit, unplug the unit and have it checked by a qualified personnel before operating it further.
- When the casing becomes soiled, clean it with a soft cloth dampened with a mild detergent solution. Never use abrasive cleaners or chemical solvents, as they may mar the casing.

If you have any question, please consult your nearest Sony dealer.

Specifications

Time display
12-hour system
Frequency range
FM: 87.5-108.0 MHz
AM: 530-1710 kHz
Channel steps
FM: 0.1 MHz (fixed)
AM: 10 kHz (fixed)
Speaker
Approx. 6.6 cm (2 5/8 in) dia.
Power output
120 mW (at 10% harmonic distortion)
Power requirements
120 V AC, 60 Hz
Dimensions
Approx. 196 x 56 x 149.5 mm (w x h x d) (7 3/4 x 2 1/4 x 6 in) incl. projecting parts and controls
Mass
Approx. 510 g (1 lb 2 oz)

Design and specifications are subject to change without notice.

IMPORTANT SAFEGUARDS

For your protection, please read these safety instructions completely before operating the appliance, and keep this manual for future reference.
Carefully observe all warnings, precautions and instructions on the appliance and described in the operating instructions supplied with the appliance by Sony.

INSTALLATION

Water and Moisture

Do not install the appliance near water: for example, near a bathtub, washbowl, kitchen sink, laundry tub, in a wet basement, or near a swimming pool.

Heat

Do not install the appliance near sources of heat such as radiators, heat registers, stoves, or other appliances that produce heat.

Ventilation

Slots and openings in the cabinet and in the back or bottom are provided for necessary ventilation. To ensure reliable and safe operation of the appliance, and to protect it from overheating, these slots and openings must never be blocked or covered.
Do not place the appliance on a bed, sofa, rug or other similar surface which may block the slots and openings.
Do not install the appliance in a confined space, such as a bookcase or built-in cabinet, unless proper ventilation is provided.

Carts and Stands

Do not install the appliance on an unstable table, shelf, cart or stand. Use only a cart or stand recommended by Sony.
An appliance and cart combination should be moved with care. Quick stops, excessive force, and uneven surfaces may cause the appliance and cart combination to overturn.

Wall or Ceiling Mounting

If your appliance can be mounted to a wall or ceiling, mount if only as recommended by Sony.

USE

Power Source

Connect the appliance to a power supply only of the type described in the operating instructions or as marked on the appliance.

Grounding or Polarization

Do not defeat the grounding or polarization feature of the AC power cord. If your AC receptacle will not accept the power cord plug, contact your electrician to install a proper AC receptacle.

AC Receptacle

Check to make sure that the AC receptacle holds the power cord plug firmly and securely. If the power cord plug is loose, contact your electrician to replace the defective and unsafe AC receptacle.

Power-Cord Protection

Route the power cord so that it is not likely to be walked on or pinched by having objects placed on it, paying particular attention to the plugs, receptacles, and the point where the cord exits from the appliance.

When not in use

Unplug the power cord of the appliance from the outlet when left unused for a long period of time.
To disconnect the cord, pull it out by grasping the plug. Never pull the plug out by the cord.

Foreign Objects

Be careful that foreign objects and liquids do not enter the enclosure through openings.

Cleaning

Clean the appliance only as recommended by Sony.

ANTENNAS

Outdoor Antenna Grounding

If an outdoor antenna or cable system is installed, follow the precautions below.
An outdoor antenna system should not be located in the vicinity of overhead power lines or other electric light or power circuits, or where it can come in contact with such power lines or circuits. WHEN INSTALLING AN OUTDOOR ANTENNA SYSTEM, EXTREME CARE SHOULD BE TAKEN TO KEEP FROM CONTACTING SUCH POWER LINES OR CIRCUITS AS CONTACT WITH THEM IS ALMOST INVARIABLY FATAL.

Be sure the antenna system is grounded so as to provide some protection against voltage surges and built-up static charges. Section 810 of the National Electrical Code provides information with respect to proper grounding of the mast and supporting structure, grounding of the lead-in wire to an antenna discharge unit, size of grounding conductors, location of antenna-discharge unit, connection to grounding electrodes, and requirements for the grounding electrode.

Antenna Grounding According to the National Electrical Code

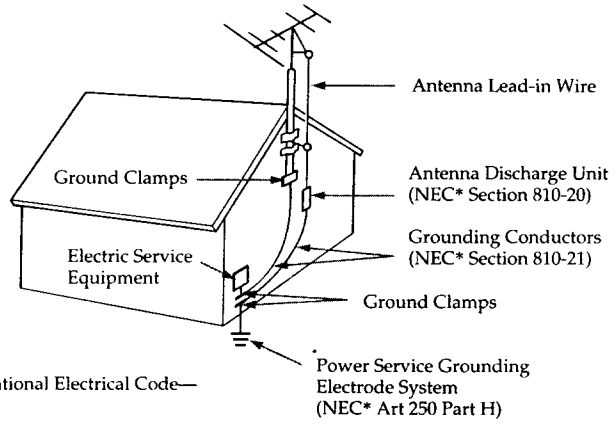

—NEC National Electrical Code—

SERVICE

Unplug the appliance from the wall outlet and consult qualified service personnel when:
-the power cord or the plug has been damaged.
-a solid object or liquid has fallen into the cabinet.
-the appliance has been exposed to rain or moisture.
-the appliance does not appear to operate normally or exhibits a marked change in performance.
-the appliance has been dropped, or the enclosure damaged.

Do not attempt to service the appliance beyond that described in the operating instructions. For all other servicing refer to qualified service personnel only.

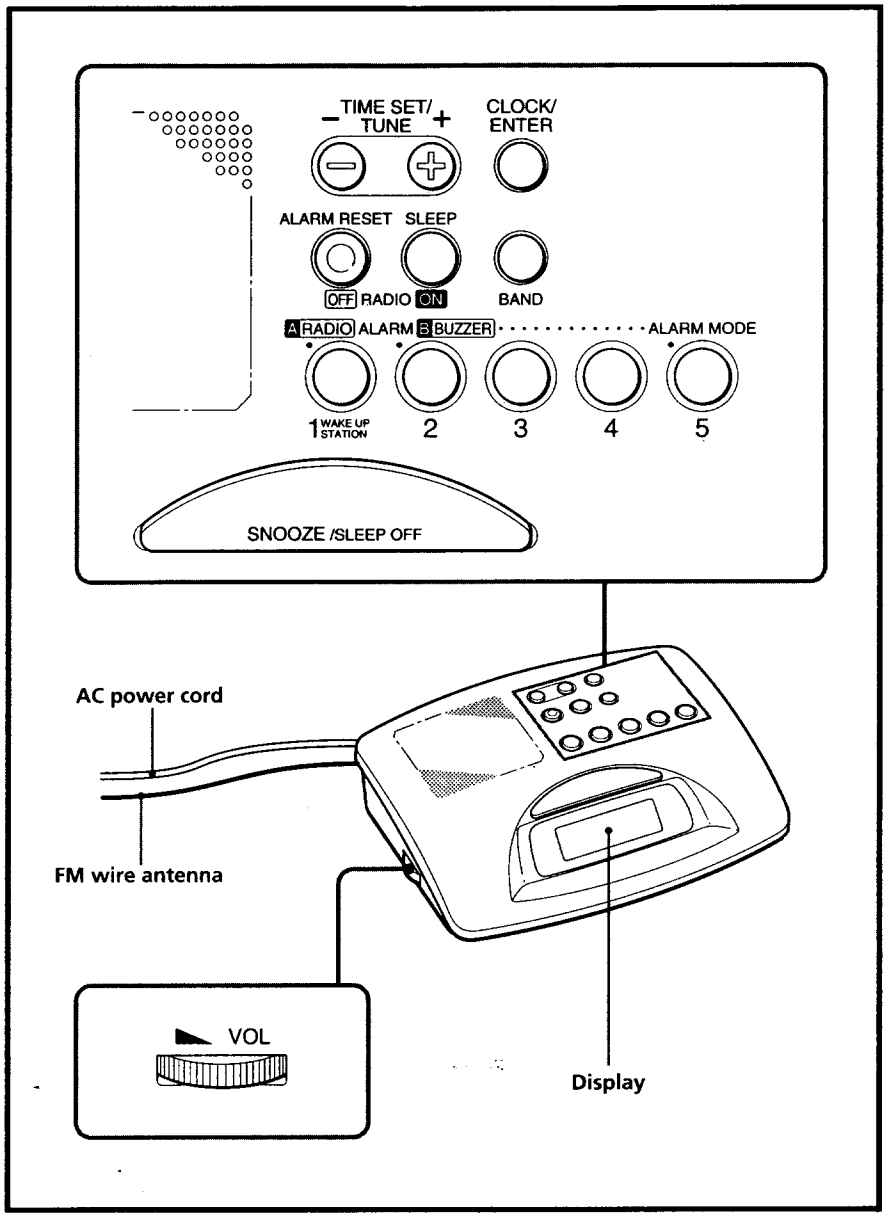
TIME SET/ TUNE
CLOCK/ ENTER
ALARM RESET
SLEEP
OFF RADIO ON
BAND
A RADIO ALARM B BUZZER
ALARM MODE
1 WAKE UP STATION
2
3
4
5
SNOOZE /SLEEP OFF
AC power cord
FM wire antenna
VOL
Display

LIMITED WARRANTY Portable Audio

SONY ELECTRONICS INC. ("SONY") warrants this Product (including any accessories) against defects in material or workmanship as follows:

1. For a period of one (1) year from the date of purchase, Sony will replace at no charge through your SONY authorized dealer, Sony owned Service Center, or the Sony Parts Center Exchange Department, the defective unit. After this one (1) year period, you must pay for the replacement unit. This warranty does not cover costs incurred in connection with the removal and re-installation of radios, speakers or accessories, nor does it cover any other contingent expenses.

2. To obtain warranty service, you must take the Product, or deliver the Product freight prepaid, in either its original packaging or packaging affording an equal degree of protection, to any authorized SONY service facility.

This warranty does not cover customer instruction, installation, set up adjustments or signal reception problems.

This warranty does not cover cosmetic damage or damage due to acts of God, accident, misuse, abuse, negligence, commercial use, or modification of, or to any part of the Product, including the antenna. This warranty does not cover damage due to improper operation or maintenance, connection to improper voltage supply, or attempted repair by anyone other than a facility authorized by Sony to service the Product. This warranty does not cover Products sold AS IS or WITH ALL FAULTS, or consumables (such as fuses or batteries). This warranty is valid only in the United States.

Proof of purchase in the form of a bill of sale or receipted invoice which is evidence that the unit is within the Warranty period must be presented to obtain warranty service.

This warranty is invalid if the factory applied serial number has been altered or removed from the Product.

REPAIR OR REPLACEMENT AS PROVIDED UNDER THIS WARRANTY IS THE EXCLUSIVE REMEDY OF THE CONSUMER. SONY SHALL NOT BE LIABLE FOR ANY INCIDENTAL OR CONSEQUENTIAL DAMAGES FOR BREACH OF ANY EXPRESS OR IMPLIED WARRANTY ON THIS PRODUCT. EXCEPT TO THE EXTENT PROHIBITED BY APPLICABLE LAW, ANY IMPLIED WARRANTY OF MERCHANTABILITY OR FITNESS FOR A PARTICULAR PURPOSE ON THIS PRODUCT IS LIMITED IN DURATION TO THE DURATION OF THIS WARRANTY.

Some states do not allow the exclusion or limitation of incidental or consequential damages, or allow limitations on how long an implied warranty lasts, so the above limitations or exclusions may not apply to you. In addition, if you enter into a service contract with the Sony Partnership within 90 days of the date of sale, the limitation on how long an implied warranty lasts does not apply to you. This warranty gives you specific legal rights, and you may have other rights which vary from state to state.

The address of the Sony Parts Center – Exchange Department is:

SONY PARTS CENTER – EXCHANGE DEPARTMENT
8281 NW 107th Terrace
Kansas City, Missouri 64153

For your convenience, SONY ELECTRONICS INC. has established telephone numbers for frequently asked questions:

To locate the servicer or dealer nearest you, call:

1-(800)-342-5721

For service assistance or resolution of a service problem, call:

SONY CUSTOMER RELATIONS CENTER
1-(800)-282-2848

For Product information or operation, call:

SONY CUSTOMER INFORMATION CENTER
(201)-368-9272
or write to:
Sony Customer Information Center
One Sony Drive
Park Ridge, New Jersey 07656-8003

For an accessory or part not available from your authorized dealer, call:

1-(800)-488-SONY (7669)

Setting the Clock

1. Plug in the unit.
   "AM 12:00" will flash in the display.
2. While holding down **CLOCK/ENTER**, press **TIME SET/TUNE +** or **–**.
   Use the + button to advance the hour and minute digits and the – button to reverse them. Hold down the + or – button to advance or reverse the time setting at high speed.
3. Release **CLOCK/ENTER**.
   The time is set and clock operation begins.

- For zero second adjustment, release **CLOCK/ENTER** at the sound of a time tone.
- The colon (":") in the time indication is flashing when the radio is off and steadily displayed when it is on.

Playing the Radio

Manual Tuning

1. Press **SLEEP/RADIO ON** to turn on the radio.
   The band and frequency and the preset number displayed before the radio was last turned off appear on the display for 10 seconds, after which the current time indication returns to the display.
2. Turn the **VOL** (volume) control to make sure the sound is audible.
3. Press **BAND** to select the band.
   The most recently tuned FM and AM frequencies alternate on the display with each press of the button.
4. Use **TIME SET/TUNE +** or **–** to tune in the desired station.
   The FM frequency advances or reverses in 0.1 MHz channel steps and the AM frequency in 10 kHz channel steps.
   A beep sounds and the tuning stops when the upper or lower extremity of the band range is reached.
5. Set the desired volume with the **VOL** control.

- To turn off the radio, press **ALARM RESET/RADIO OFF**.
- To improve reception
  FM: Extend the FM wire antenna fully to increase FM reception sensitivity.
  AM: Rotate the unit horizontally to the position in which reception is clearest.
- To check the current station, press the + button lightly. The band and frequency are displayed for 10 seconds, after which the current time indication returns to the display.
- Each time the radio is turned on or the frequency changed, the band and frequency replace the current time indication for 10 seconds.
- If the radio alarm A RADIO comes on while the radio is playing, the station switches to the frequency set under preset number 1 (the wake-up frequency).
- To check the current station, press the preset number button. The band and frequency are displayed for 10 seconds.

Setting the Alarm

You can set the radio and buzzer alarms at the preset time. Before setting the alarm, be sure to set the clock (See ' Setting the Clock").

1. Turn off the radio.
2. While holding down **ALARM**, press either **TIME SET/TUNE +** or **–** until the desired time appears in the display.
   At this time, the A RADIO or B BUZZER indication appears in the display.
3. Release **ALARM**.
4. Press **ALARM MODE** until the alarm you want appears in the display.
   Each time you press **ALARM MODE**, the alarm indication changes as follows.

No alarm indication → A RADIO → B BUZZER → A RADIO and B BUZZER → No alarm indication

When the alarm time is reached, the radio or buzzer sounds for 60 minutes or until turned off.

To stop the alarm

Press **ALARM RESET/RADIO OFF** while the alarm is activated.
The alarm will function at the same time the next day.

To cancel the alarm

Press **ALARM MODE** until neither the A RADIO nor B BUZZER indication is displayed.

Notes
- The alarm does not function, unless you set the clock, A RADIO and B BUZZER function.
- If both the radio and buzzer alarm are set for the same time, the radio alarm takes precedence.
- You can check the alarm time setting by pressing A RADIO **ALARM** or B BUZZER **ALARM**.

To doze for a few more minutes

1. Press **SNOOZE/SLEEP OFF** while the alarm is sounding.
   The alarm will be silenced for about 8 minutes, after which it will sound again.
   You can use the snooze alarm repeatedly in this manner for about one hour.

- The alarm indication continues to flash in the display while the snooze alarm function is operational.

Preset Tuning

You can preset up to five stations for one-touch tuning, one under each of preset buttons 1 to 5.

Presetting a station

Example: To set AM 1260 kHz in preset button 2.

1. Tune in the station you want to preset. (See "Manual Tuning")
2. Press **CLOCK/ENTER**.
   "P" flashes in the display for about 10 seconds.

3. Press the preset button under which you wish to store the station before the "P" indication stops flashing.
   Two beeps sound to indicate successful presetting.

- The current time indication replaces the band and frequency indication on the display 10 seconds after a station is preset, but the preset number remains in the display.
- When using the radio alarm, preset the station you wish to serve as the alarm (the wake-up frequency) under preset button 1.

To change a preset station

Press the preset number again after tuning manually to a different station. The previous station is replaced by the new one.

Tuning in a preset station

1. Press **SLEEP/RADIO ON** to turn on the radio.
2. Press the preset button under which the desired station is stored.
   The band, frequency and preset number replace the current time indication in the display for about 10 seconds.

Setting the Sleep Timer

You can enjoy falling asleep to the radio using the built-in sleep timer that turns off the radio automatically after a preset duration.
You can set the sleep timer for 90, 60, 30, or 15 minutes.

1. Press **RADIO ON/SLEEP** repeatedly.
   The radio turns on. Each time you press **RADIO ON/SLEEP**, the duration changes as follows.
   Current time → On → 90 (min.)
   ↳ 15 ← 30 ← 60 ↲
   The radio will turn off automatically after the selected preset duration has elapsed.

- To cancel the sleep timer function and turn off the radio, press **SNOOZE/SLEEP OFF**.

To Use Both Sleep Timer and Alarm

You can fall asleep to the radio sound and you will be awakened by the radio or buzzer alarm at the preset time.

1. Set the alarm. (See "Setting the Alarm".)
2. Set the sleep timer.(See "Setting the Sleep Timer".)

Troubleshooting

Should any problem occur with the unit, make the following simple checks to determine whether or not servicing is required.
If the problem persists, consult the nearest Sony dealer.

The clock does not show the correct time.

- Has an electrical power outage lasting more than 5 minutes occurred?

The radio or buzzer alarm does not sound at the preset alarm time.

- Has the desired radio and/or buzzer alarm mode been activated with the **ALARM MODE** button (A RADIO and/or B BUZZER indication shown in the display)?